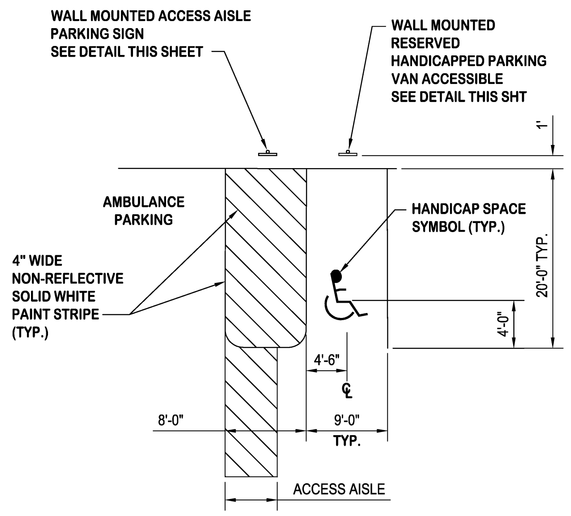

NOTE: 1. EACH SPACE TO BE PROVIDED WITH STD. HDCP. PARKING SIGN.
2. DIAGONAL STRIPES SHALL BE 2' ON CENTER.

HANDICAP STRIPING

NOT TO SCALE

1. USE MUTCD SECTION 2B-39
2. APPROPRIATE ARROW PLATE MAY BE USED WHEN IT IS NECESSARY TO OFFSET INSTALLATION LOCATION DUE TO ACCESS AISLE.

COLORS
LEGEND AND BORDER - RED
BACKGROUND - WHITE

ACCESS AISLE PARKING SIGN

NOT TO SCALE

COLORS

LEGEND AND BORDER - GREEN/WHITE SYMBOL - ON BLUE BACKGROUND/BACKGROUND - WHITE

APPROPRIATE ARROW DIRECTION SHALL BE USED WHEN IT IS NECESSARY TO OFFSET INSTALLATION LOCATIONS DUE TO ACCESS RAMP AND AISLE.

HANDICAPPED ACCESS SIGN

NOT TO SCALE

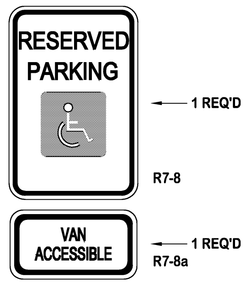

COLORS

LEGEND AND BORDER - GREEN
SYMBOL - WHITE ON BLUE BACKGROUND
BACKGROUND - WHITE

EACH ACCESSIBLE PARKING SPACE SHALL BE IDENTIFIED BY AN APPROVED SIGN WITH THE BOTTOM EDGE AT LEAST 7 FEET ABOVE THE GROUND, UNLESS THE SIGN IS PLACED FLUSH AGAINST A BUILDING, STRUCTURE, OR OTHER LOCATION THAT DOES NOT OBSTRUCT VEHICLE OR PEDESTRIAN TRAFFIC, IN WHICH CASE THE SIGN SHALL BE AT LEAST 6 FEET AND NO MORE THAN 10 FEET ABOVE THE GROUND. SIGNS SHALL BEAR THE INTERNATIONAL SYMBOL OF ACCESS AND THE WORDS "RESERVED PARKING" AND SHALL BE IN CONFORMANCE WITH THE REQUIREMENTS OF THE MARYLAND DEPARTMENT OF TRANSPORTATION, STATE HIGHWAY ADMINISTRATION STANDARD SIGN MANUAL.

RESERVED HANDICAPPED PARKING SIGN

NOT TO SCALE

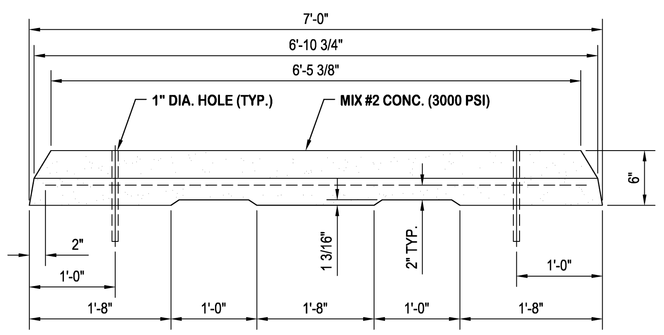

FRONT ELEVATION

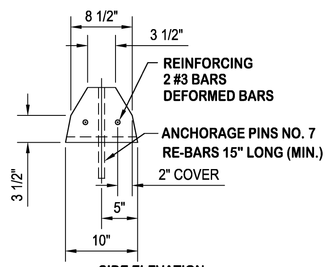

SIDE ELEVATION

TYPICAL TYPE I WHEEL STOP

NOT TO SCALE

KANN PARTNERS
33 SOUTH GAY STREET, SUITE 400 - BALTIMORE, MD 21202
P 410-234-0900
F 410-539-4921
WWW.KANNPARTNERS.COM

CARROLL ENGINEERING, INC.
EXECUTIVE PLAZA IV, SUITE LL1
11350 MCCORMICK ROAD
HUNT VALLEY, MD 21031
410-785-7423 PHONE 410-771-1313 FAX

These drawings are the property of the Architect, KANN Partners, registered trade name of Kann & Associates, Inc., a Maryland Corporation. Unauthorized reproduction for any purpose is an infringement upon copyright laws. Violators will be subject to prosecution by the fullest extent of the law.
Written dimensions on these drawings shall have precedence over scale dimensions. Contractors shall verify and be responsible for all dimensions and conditions on the job and this office must be notified of any variation from the dimensions and conditions shown by these drawings.

HEALTH CARE FOR THE HOMELESS, INC.
NEW CLINIC & HEADQUARTERS BUILDING
421 FALLSWAY
BALTIMORE, MD 21202

Milestone Description	Date
-	-
90% CONSTRUCTION DRAWINGS	07/25/08
PERMIT SET	07/08/08
DESIGN DEVELOPMENT	04/18/08
SCHEMATIC DESIGN	01/11/08

Mark	Revision Description	Date

KA Project Number:	06-026
SM	CC
PM	VT
© KANN Partners registered trade name of Kann & Associates, Inc.	2007

Sheet Title:
SITE DETAILS

C
C-5

SCALE: AS NOTED