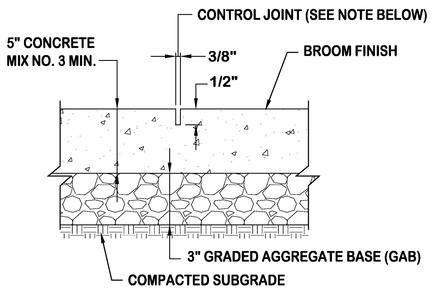

NOTES:
1. LOCATE CONTROL JOINTS EVERY 5' O.C.
2. LOCATE EXPANSION JOINTS EVERY 15' O.C.

TYPICAL CONCRETE SIDEWALK SECTION

NOT TO SCALE

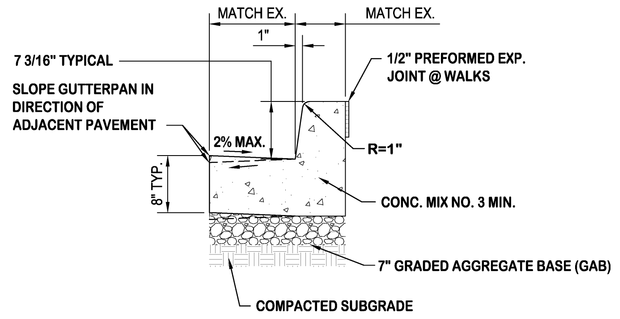

PROVIDE CONTRACTION JOINTS @ 10' INTERVALS

TYPICAL TYPE A CONCRETE CURB AND GUTTER

NOT TO SCALE

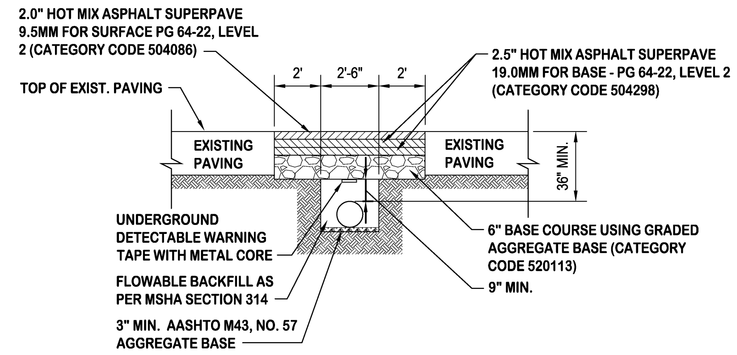

NOTES: 1. REMOVE WASTE MATERIALS, UNSUITABLE AND EXCESS TOPSOIL FROM OWNERS PROPERTY.
2. SEE SHA SPECIFICATION SECTIONS 501 AND 504.

TYPICAL UTILITY TRENCH DETAIL- PAVED AREAS

NOT TO SCALE

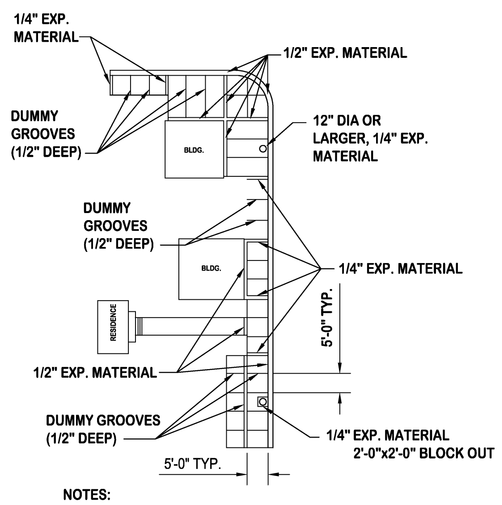

NOTES:
1. EXPANSION MATERIAL: USE PREFORMED JOINT-FILLER STRIPS.
2. EXTEND JOINT FILLERS FULL WIDTH AND DEPTH OF JOINT.
3. FURNISH JOINT-FILLERS IN ONE-PIECE LENGTHS. WHERE MORE THAN ONE LENGTH IS REQUIRED, LACE OR CLIP JOINT-FILLER SECTIONS TOGETHER.

TYPICAL SIDEWALK EXPANSION JOINTS

NOT TO SCALE

KANN PARTNERS
33 SOUTH GAY STREET, SUITE 400 - BALTIMORE, MD 21202
P 410-234-0900
F 410-539-4921
WWW.KANNPARTNERS.COM

CARROLL ENGINEERING, INC.
EXECUTIVE PLAZA IV, SUITE LL1
11350 MCCORMICK ROAD
HUNT VALLEY, MD 21031
410-785-7423 PHONE 410-771-1313 FAX

These drawings are the property of the Architect, KANN Partners, registered trade name of Kann & Associates, Inc., a Maryland Corporation. Unauthorized reproduction for any purpose is an infringement upon copyright laws. Violators will be subject to prosecution by the fullest extent of the law.
Written dimensions on these drawings shall have precedence over scale dimensions. Contractors shall verify and be responsible for all dimensions and conditions on the job and this office must be notified of any variation from the dimensions and conditions shown by these drawings.

HEALTH CARE FOR THE HOMELESS, INC.
NEW CLINIC & HEADQUARTERS BUILDING
421 FALLSWAY
BALTIMORE, MD 21202

Milestone Description	Date
-	-
90% CONSTRUCTION DRAWINGS	07/25/08
PERMIT SET	07/08/08
DESIGN DEVELOPMENT	04/18/08
SCHEMATIC DESIGN	01/11/08

Mark	Revision Description	Date

KA Project Number:	06-026
SM	CC
PM	VT
© KANN Partners registered trade name of Kann & Associates, Inc.	2007

Sheet Title:
SITE DETAILS

C
C-4