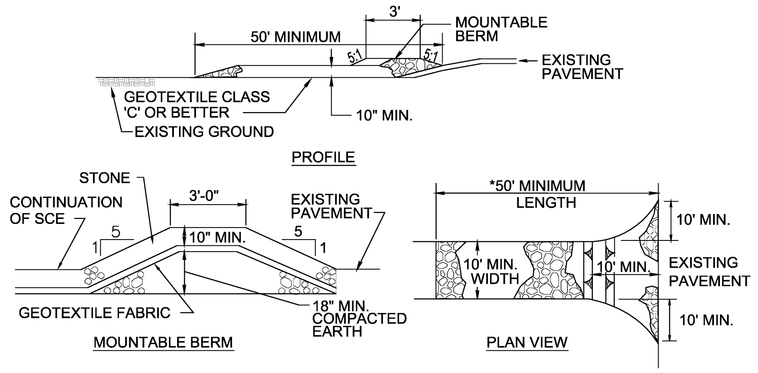

CONSTRUCTION ENTRANCE

1. STONE - CRUSHED AGGREGATE (2" TO 3") OR RECLAIMED OR RECYCLED CONCRETE EQUIVALENT.
2. LENGTH - AS REQUIRED, BUT NOT LESS THAN 50 FEET (EXCEPT ON SINGLE RESIDENCE LOT WHERE A 30 FOOT MIN. LENGTH WILL APPLY).
3. THICKNESS - NOT LESS THAN TEN (10) INCHES.
4. WIDTH - TEN (10) FOOT MINIMUM, BUT NOT LESS THAN THE FULL WIDTH AT POINTS WHERE INGRESS OR ENGRESS OCCURS.
5. GEOTEXTILE FABRIC CLASS 'C' OR BETTER SHALL BE PLACED OVER THE EXISTING GROUND PRIOR TO PLACING OF STONE. GEOTEXTILE FABRIC WILL NOT BE REQUIRED ON A SINGLE FAMILY RESIDENT LOT.
6. A MOUNTABLE BERM WITH 5:1 SLOPES IS REQUIRED FOR ALL SURFACE WATER FLOWING OR DIVERTED TOWARDS CONSTRUCTION ENTRANCE.
7. MAINTENANCE - THE ENTRANCE SHALL BE MAINTAINED IN A CONDITION WHICH WILL PREVENT TRACKING OR FLOWING OF SEDIMENT ONTO PUBLIC RIGHT-OF-WAY. THIS MAY REQUIRE PERIODIC TOP DRESSING WITH ADDITIONAL STONE AS CONDITIONS DEMAND AND REPAIR AND/OR CLEANOUT OF ANY MEASURES USED TO TRAP SEDIMENT. ALL SEDIMENT SPILLED, DROPPED, WASHED OR TRACKED ONTO PUBLIC RIGHT-OF-WAY MUST BE REMOVED IMMEDIATELY.
8. WASHING - WHEELS MUST BE CLEANED TO REMOVE SEDIMENT PRIOR TO ENTRANCE ONTO PUBLIC RIGHT-OF-WAY. WHEN WASHING IS REQUIRED, IT SHALL BE DONE ON AN AREA STABILIZED WITH STONE AND WHICH DRAINS INTO AN APPROVED SEDIMENT TRAPPING DEVICE.
9. PERIODIC INSPECTION AND NEEDED MAINTENANCE SHALL BE PROVIDED AFTER EACH RAIN.

HEAVY DUTY STABILIZED CONSTRUCTION ENTRANCE

SCALE: NONE

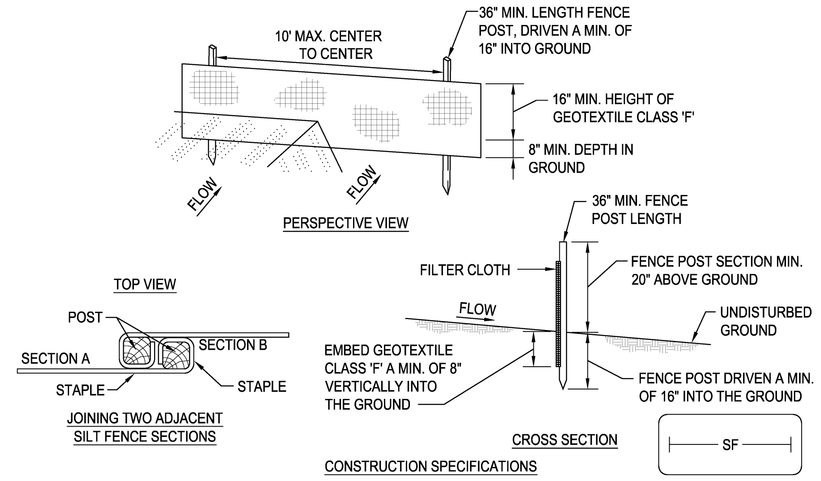

CONSTRUCTION SPECIFICATIONS

1. FENCE POSTS SHALL BE A MINIMUM OF 36" LONG, DRIVEN 16" MINIMUM INTO THE GROUND. WOOD POSTS SHALL BE 1-1/2"x 1-1/2" SQUARE (MIN.) CUT, OR 1-3/4" DIAMETER (MIN.) ROUND AND SHALL BE OF SOUND QUALITY HARDWOOD. STEEL POSTS WILL BE STANDARD T OR U SECTION WEIGHING NOT LESS THAN 1.00 POUNDS PER LINEAR FOOT.
2. GEOTEXTILE SHALL BE FASTENED SECURELY TO EACH FENCE POST WITH WIRE TIES OR STAPLES AT TOP AND MID-SECTION AND SHALL MEET THE FOLLOWING REQUIREMENTS FOR GEOTEXTILE CLASS 'F':

TENSILE STRENGTH: 50 lbs/in (MIN.)	TEST: MSMT 509
TENSILE MODULUS: 20 lbs/in (MIN.)	TEST: MSMT 509
FLOW RATE: 0.3 gal. ft^2/minute (MAX.)	TEST: MSMT 322
FILTERING EFFICIENCY: 75% (MIN.)	TEST: MSMT 322

3. WHERE ENDS OF GEOTEXTILE FABRIC COME TOGETHER, THEY SHALL BE OVERLAPPED, FOLDED AND STAPLED TO PREVENT SEDIMENT BYPASS.
4. SILT FENCE SHALL BE INSPECTED AFTER EACH RAINFALL EVENT AND MAINTAINED WHEN BULGES OCCUR OR WHEN SEDIMENT ACCUMULATION REACHES 50% OF THE FABRIC HEIGHT.

SILT FENCE DESIGN CRITERIA

SLOPE STEEPNESS	(MAXIMUM) SLOPE LENGTH	(MAXIMUM) SILT FENCE LENGTH
FLATTER THAN 50:1	UNLIMITED	UNLIMITED
50:1 TO 10:1	125 FEET	1,000 FEET
10:1 TO 5:1	100 FEET	750 FEET
5:1 TO 3:1	60 FEET	500 FEET
3:1 TO 2:1	40 FEET	250 FEET
2:1 OR STEEPER	20 FEET	125 FEET

NOTE: IN AREAS OF LESS THAN 2% SLOPE AND SANDY SOILS (USDA GENERAL CLASSIFICATION SYSTEM, SOIL CLASS A) MAXIMUM SLOPE LENGTH AND SILT FENCE LENGTH WILL BE UNLIMITED. IN THESE AREAS A SILT FENCE MAY BE THE ONLY PERIMETER CONTROL REQUIRED.

SILT FENCE

NOT TO SCALE

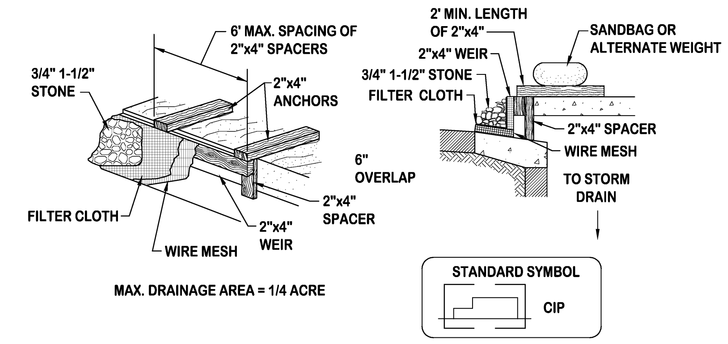

CONSTRUCTION SPECIFICATIONS

1. ATTACH A CONTINUOUS PIECE OF WIRE MESH (30" MIN. WIDTH BY THROAT LENGTH PLUS 4') TO THE 2"x4" WEIR (MEASURING THROAT LENGTH PLUS 2') AS SHOWN ON THE STANDARD DRAWING.
2. PLACE A CONTINUOUS PIECE OF GEOTEXTILE CLASS 'E' THE SAME DIMENSIONS AS THE WIRE MESH OVER THE WIRE MESH AND SECURELY ATTACH IT TO THE 2"x4" WEIR.
3. SECURELY NAIL THE 2"x4" WEIR TO A 9" LONG VERTICAL SPACER TO BE LOCATED BETWEEN THE WEIR AND THE INLET FACE (MAX. 4' APART).
4. PLACE THE ASSEMBLY AGAINST THE INLET THROAT AND NAIL (MIN. 2' LENGTHS OF 2"x4" TO THE TOP OF THE WEIR AT SPACER LOCATIONS). THESE 2"x4" ANCHORS SHALL EXTEND ACROSS THE INLET TOP AND BE HELD IN PLACE BY SANDBAGS OR ALTERNATE WEIGHT.
5. THE ASSEMBLY SHALL BE PLACED SO THAT THE END SPACERS ARE A MIN. 1' BEYOND BOTH ENDS OF THE THROAT OPENING.
6. FORM THE 1/2"x1/2" WIRE MESH AND THE GEOTEXTILE FABRIC TO THE CONCRETE GUTTER AND AGAINST THE FACE OF THE CURB ON BOTH SIDES OF THE INLET. PLACE CLEAN 3/4"x1-1/2" STONE OVER THE WIRE MESH AND GEOTEXTILE FABRIC IN SUCH A MANNER TO PREVENT WATER FROM ENTERING THE INLET UNDER OR AROUND THE GEOTEXTILE.
7. THIS TYPE OF PROTECTION MUST BE INSPECTED FREQUENTLY AND THE FILTER CLOTH AND STONE REPLACED WHEN CLOGGED WITH SEDIMENT.
8. ASSURE THAT STORM FLOW DOES NOT BYPASS THE INLET BY INSTALLING A TEMPORARY EARTH OR ASPHALT DIKE TO DIRECT THE FLOW TO THE INLET.

CURB INLET PROTECTION

NOT TO SCALE

ESD# 5751

KANN PARTNERS
33 SOUTH GAY STREET, SUITE 400 - BALTIMORE, MD 21202
P 410-234-0900
F 410-539-4921
WWW.KANNPARTNERS.COM

CARROLL ENGINEERING, INC.
EXECUTIVE PLAZA IV, SUITE LL1
11350 MCCORMICK ROAD
HUNT VALLEY, MD 21031
410-785-7423 PHONE 410-771-1313 FAX

These drawings are the property of the Architect, KANN Partners, registered trade name of Kann & Associates, Inc., a Maryland Corporation. Unauthorized reproduction for any purpose is an infringement upon copyright laws. Violators will be subject to prosecution by the fullest extent of the law.
Written dimensions on these drawings shall have precedence over scale dimensions. Contractors shall verify and be responsible for all dimensions and conditions on the job and this office must be notified of any variation from the dimensions and conditions shown by these drawings.

HEALTH CARE FOR THE HOMELESS, INC.
NEW CLINIC & HEADQUARTERS BUILDING
421 FALLSWAY
BALTIMORE, MD 21202

Milestone Description	Date
-	-
90% CONSTRUCTION DRAWINGS	07/25/08
PERMIT SET	07/08/08
DESIGN DEVELOPMENT	04/18/08
SCHEMATIC DESIGN	01/11/08

Mark	Revision Description	Date

KA Project Number:	06-026
SM	CC
PM	VT
© KANN Partners registered trade name of Kann & Associates, Inc.	2007

Sheet Title:
ESC DETAILS
2 OF 3

C
C-12